NEXT GA2O 100

BMF ®

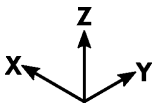

X₁0mm

Y₁0mm

Z₁0mm

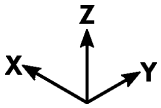

X 1000 mm

Y 138 mm

Z 820 mm

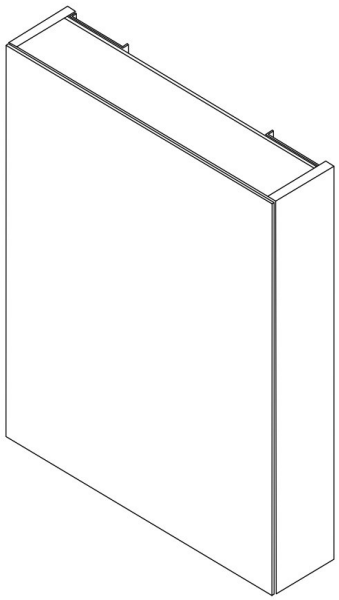

1

2

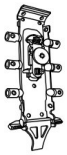

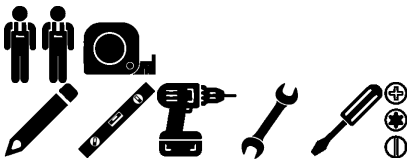

X 1000 mm

Z 820 mm

A 80 mm

B 195 mm

C mm

D 1/2 Z

E 1/2 X

F 400 mm

G 300 mm

H mm

I mm

J mm

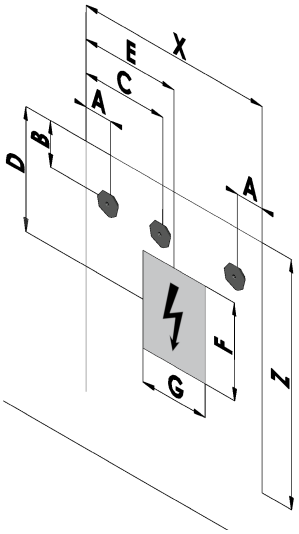

220V-240V~ ; 50Hz-60Hz ; 30W ; IP44 ; 4000K

Max. 50 Kg

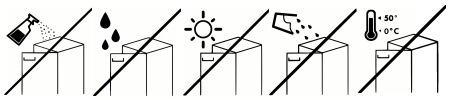

1

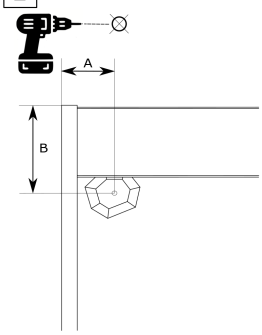

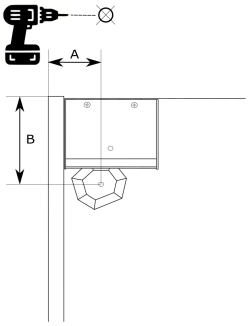

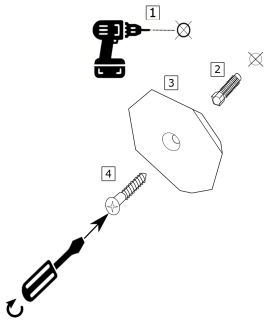

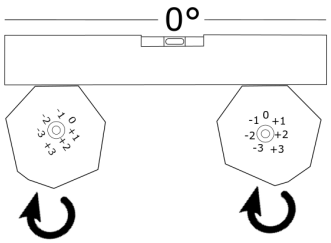

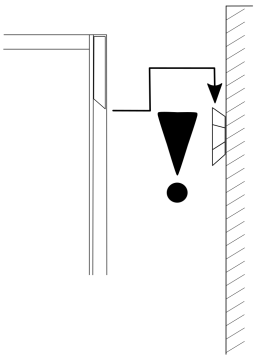

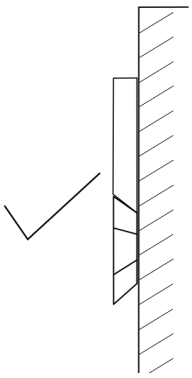

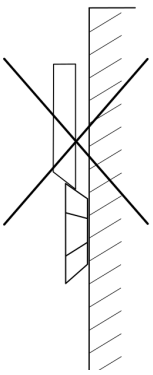
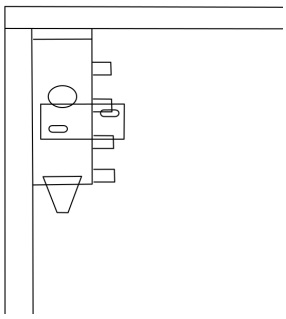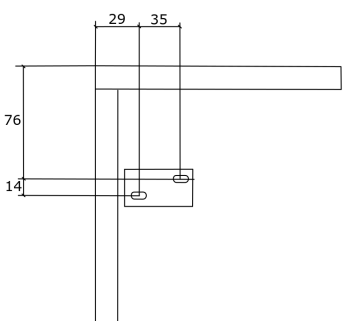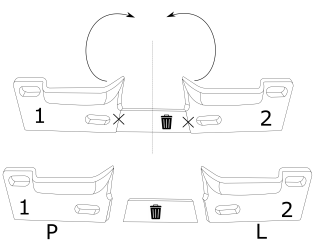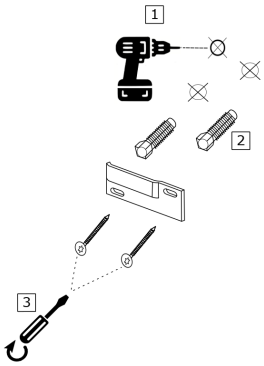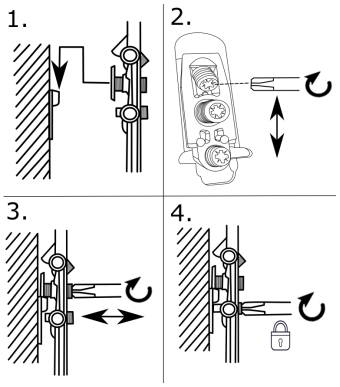
2